# Energy Star
## Smoke Vent

Industrial Smoke Vent and
(**Optional**) Security Grill

Fiberglass Dome

# Model SVAF

**Frame Material**
Aluminum

FM APPROVED

UL LISTED

Details (Scale: 5/8":1'-0")

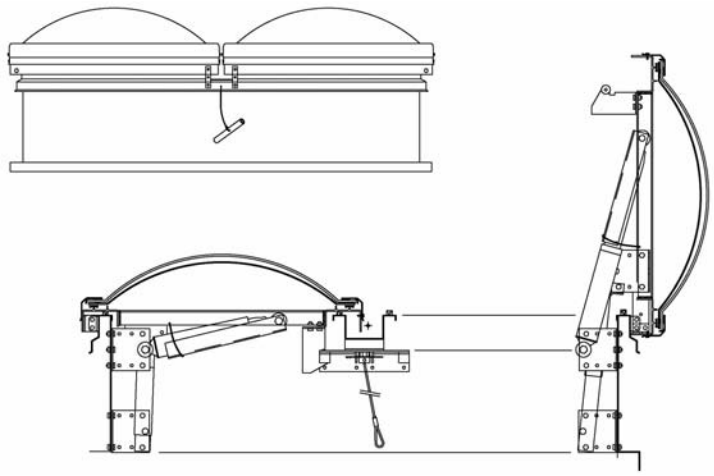

SVAF-SF-2 SVAF-CM-2

Specifications

Energy Star Smoke Vents shall be model No._____ as manufactured by Bristolite Daylighting Systems, Santa Ana, CA. Skylight domed doors shall be fiberglass with CC-1 rating as manufactured by Bristolite. Curb frames shall be 11 gauge aluminum and shall be 13" high (12" to door hinge) with a 4" pre-drilled fastening flange. Curb shall have an integral fully corner welded cap flashing. Exterior insulation (when specified) shall be 1" rigid fiberboard. Double leaf doors are compression loaded by a torsion spring and secured on the opposite side with latches operated either manually, or by FM approved / UL listed fusible links and shall open and lock in a 90 degree open position. Door shall open against a 10psf, 20psf or 30psf uniform load and shall withstand a uniform 10psf load in the open and locked position. Doors shall be spring-actuated and equipped with heavy-duty shock absorbers to control speed of operation. Unit shall withstand a 40psf uniform static load in the closed position, and a 30psf uplift load. Both exterior and interior manual releases that do not affect the fusible link shall also be provided and shall automatically be reset by closing the vent doors. All hardware shall be plated for corrosion resistance.

Bristolite fiberglass glazing has been load tested and complies with OSHA – CFR's for fall protection. Materials tested in conformance with FM 4431 including 2" severe hail test.

Sizes:

| Model Number | Inside Curb Dimension | Model Number | Inside Curb Dimension | Model Number | Inside Curb Dimension | Model Number | Inside Curb Dimension |
|---|---|---|---|---|---|---|---|
| 4848-SVAF | 48" x 48" | | | 4872-SVAF | 48" x 72" | 6096-SVAF | 60" x 96" |
| | | | | 4896-SVAF | 48" x 96" | | |
| | | | | 6072-SVAF | 60" x 72" | | |

Solar Heat Gain Coefficient = .46, U Factor = .63, Visible Light Transmission = 63% (Typical for ESA double glazed units)

Features:
1. Curb Mounted (CM) or Self Flashing (SF)
2. Energy Star Glazing (ESA)
3. Exterior and/or Interior Manual Releases (M1, M2 or M3)
4. Fusible Link Temperatures: 165°, 212°, 286°, 360° or 520°
   Add highlighted suffixes to model number where applicable:
   i.e. 4896-SVAF-CM-2-ESA-INSG

Options:
1. Insulating Double Domes (2) or Single Dome (1)
2. Insulated Frame (INS)
3. Insulated Frame and Gutter (INSG)

Options: (cont.)
4. 10psf, 20psf, or 30psf Opening Capability

Accessories: See PDS (Product Data Sheets) for these Items
1. Gladiator
   a. Structural Curb (SC)
   b. Security Grills (SG)
   c. Safety Screens (SSCRN)
2. Quickkit (Installation Kits)
   a. Stainless Steel (QKSS)
   b. Zinc Plated (QKZP)

Bristolite® Daylighting Systems
harnessing sunlight for energy savings

401 E. Goetz Avenue
Santa Ana, CA 92707
sales@bristolite.com
www.bristolite.com

800.854.8618
714.540.8950
Fax 714.540.5415

U.S. GREEN BUILDING COUNCIL MEMBER